Architectural Products

U169AW

Roll Towel Dispenser

Revision 01/12

JOB #:

ITEM #:

QUANTITY:

MOUNTING	HANDING	TYPE	SIZE	OTHER

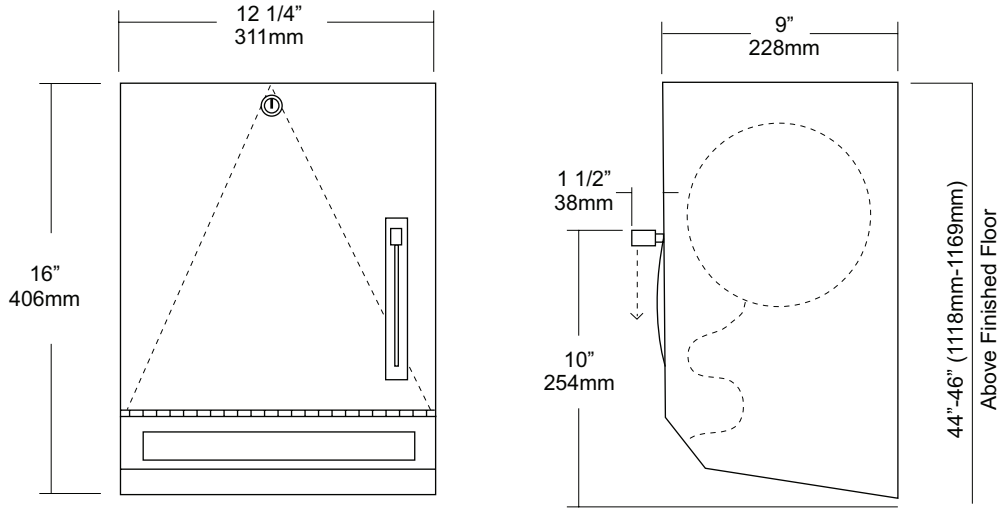

SPECIFICATIONS

Cabinet Body: Fabricated of #22 ga stainless steel with #4 satin finish.

Cabinet Door: Fabricated of #18 ga stainless steel, #4 satin finish. Lever opening has been deburred to prevent injury and allow a smooth lever operation.

Back: #22 ga stainless steel, with key holes slots for mounting.

Roll Towel Mechanism: Operable with one hand and less than 5 lbs of force without any turning of wrist or tight grasping. Adjustments can be made to dispense three pre-set amount of paper to be dispensed per stroke. Unit is equipped with an automatic stub roll transfer.

Lock: Pin tumbler, commercial quality lock, keyed like all other AJW cabinets.

Hinge: Full length, heavy duty, stainless steel

Overall Size: 12 1/4”W x 16”H x 10 1/2”D

311mm x 406mm x 267mm

Capacity: One standard size roll of 8” or 9” wide. (Use only non-perforated towels). One stub roll up to 2 3/4” OD

***Recommended 600ft roll for best results.**

INSTALLATION

Provide an area on mounting surface at desired or specified location. Coordinate installation with architect / contractor. Open cabinet door, place unit against wall making sure unit is level and transfer mounting points. Top of cabinet should be no higher than 48” above finished floor to comply with ADA Code. Secure cabinet to wall surface with proper fasteners for each application. Load towels in cabinet per instruction label.

NOTES

Formerly Model #: U169A/199AW