AJW Architectural Products

U1512EA
Circuit Diagram

JETAIR AJW Architectural Products

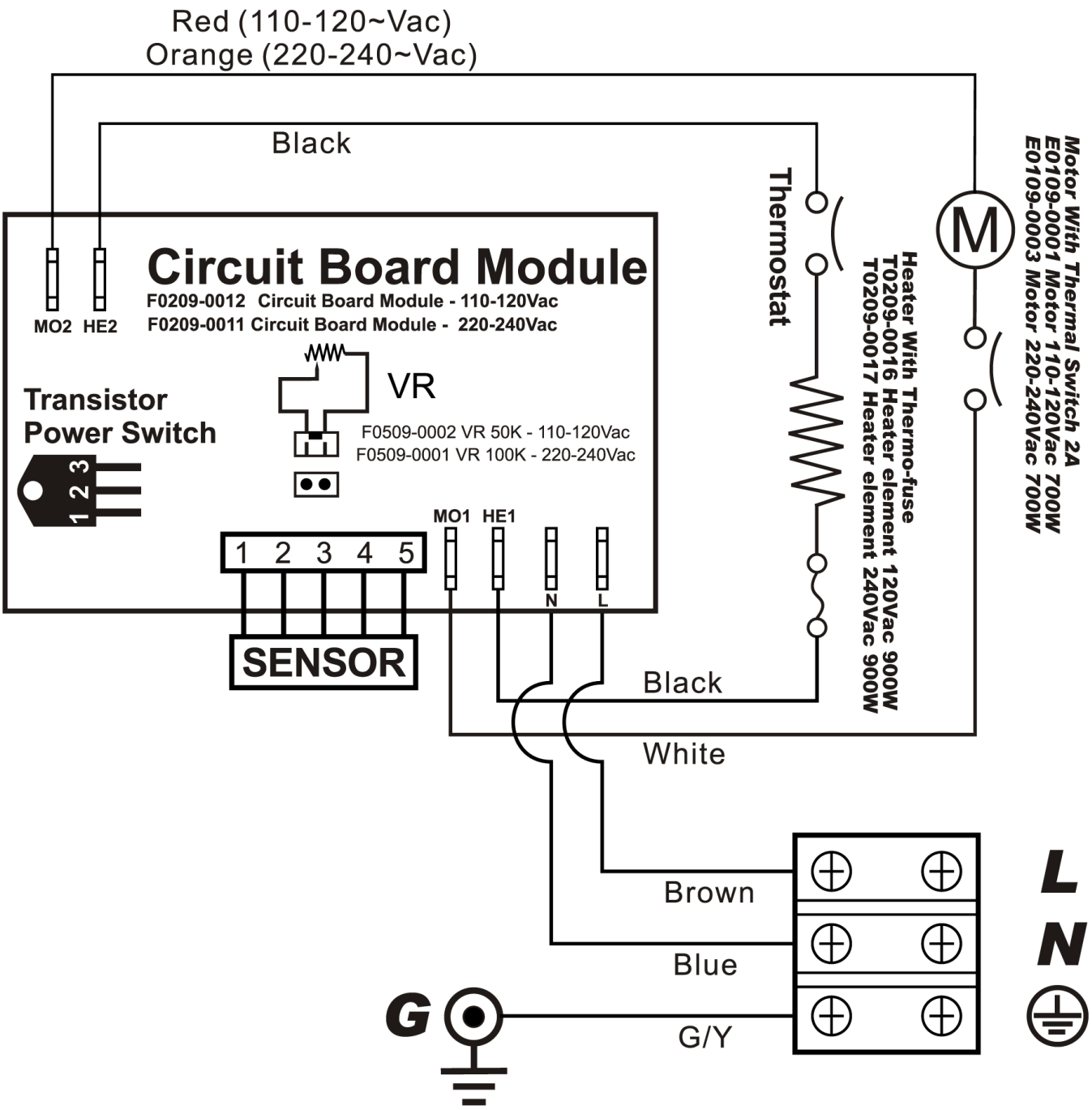

This information is subject to change without formal notice. If you need additional help, AJW has a technical support staff that is ready to assist you by phone: (845) 562-3332, fax: (845)562-3391, email: engineering@ajw.com or visit our website: www.ajw.com. Copyright © 2013 AJW Architectural Products